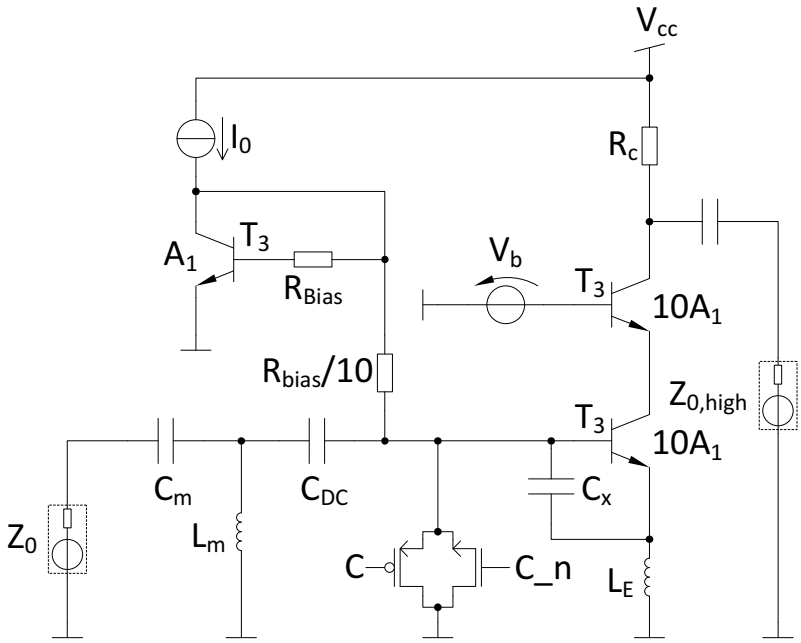
Vcc
I0
Rc
T3
A1
RBias
Vb
T3
10A1
Rbias/10
Z0,high
T3
10A1
Cm
CDC
Cx
Z0
Lm
C
C_n
LE